REVISION TABLE				
REV.	DESCRIPTION	ECO No	DATE	REQUESTOR
B	CHANGED SOCKET CONTACT AND EXTERNAL SEAL; RF	ECO-109760	20-Jan-2015	M. Herink
C	ADDED NEW NOTES;VA	ECO-114749	27-May-2015	A. Tonev

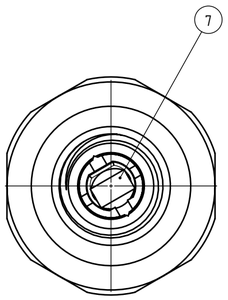

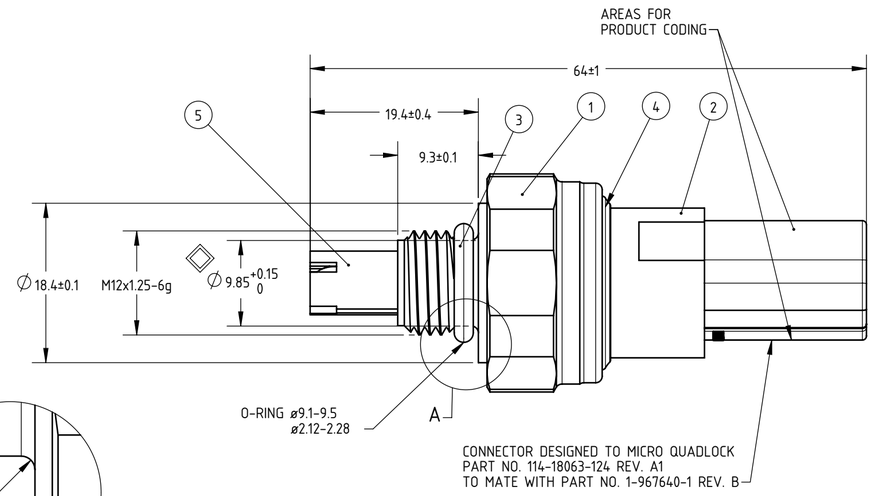

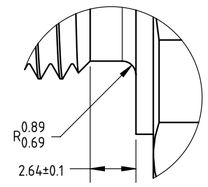

DETAIL A
SCALE 4 : 1

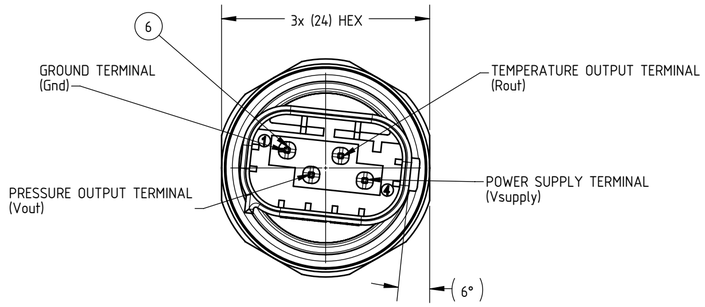

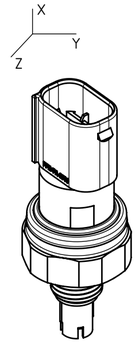

SCALE 1.:1

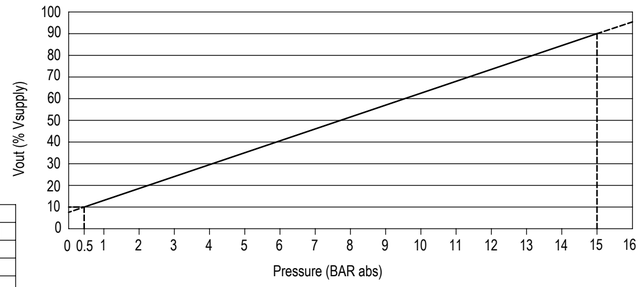

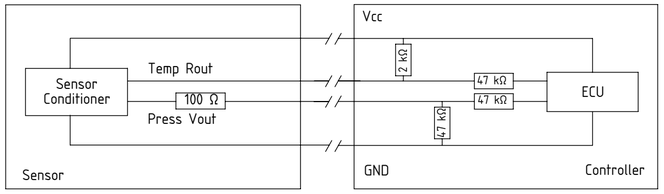

ELECTRICAL SCHEMATIC

NOTES;

1. CONNECTOR DESIGNED TO MATE WITH AMP MICRO QUADLOCK SYSTEM.
   HOUSING: 1-967640-1 (CODE A)
   WIRE SEAL: 967067-1
   SOCKET CONTACT: 962885-6
2. SIX SIDED 24.0 MM DRIVER REQUIRED TO TORQUE HEX.
3. RECOMMENDED TORQUE TO BE APPLIED ONLY TO HEX FLATS 6-8Nm. MAX. TORQUE 25Nm.
4. O-RING DIMENSION AND TOLERANCES ARE BEFORE INSERTION.
5. PART DESIGNED TO SEAL AN M12x1.5 EXTERNAL THREAD PER SAE J2244.
6. 100% FUNCTIONAL AND TRANSFER FUNCTION CHECK.
7. 100% HELIUM LEAK TEST: REQUIREMENT 10^{-5} mbar l/s AT NOMINAL PRESSURE OF 15 bar (ABS).
8. 100% NTC ELECTRICAL CONNECTION TEST DURING PRODUCTION PROCESS.
9. PART TO BE CODED ACCORDING TO:

SIDE 1: E4

SIDE 2

CA.0136141.A MAGNETI MARELLI P/N
81CP66-01 SENSATA P/N
DDDYYS DATE CODE
DDD: DAY OF THE YEAR
YY: LAST TWO DIGITS OF THE YEAR
S: SHIFT NUMBER
MX COUNTRY OF ORIGIN (MX FOR MEXICO)

110R - 000095 CNG HOMOLOGATION Nr.

◇ IS SENSATA'S SIGNIFICANT SYMBOL, Cpk ≥ 1.67, Ppk ≥ 1.33, OR 100% CHECK

TECHNICAL SPECIFICATIONS:

COMPONENT SPECIFICATION: MAGNETI MARELLI----------: 00117633

ELECTRICAL
- POWER SUPLY VOLTAGE----------: 5.0±0.1VDC
- SUPPLY CURRENT----------: 10mA MAX.
  OUTPUT VOLTAGE RANGE (PRESSURE)----------: 0.5 TO 4.5V TYPICAL
- OUTPUT RESISTANCE RANCE (TEMPERATURE)----------: 316181 TO 271 OHMS TYPICAL

ENVIRONMENT
- OPERATING TEMPERATURE---------- : -40 TO 130°C
- PRESSURE RANGE---------- : 0.5 TO 15 BAR abs
- MEDIUM---------- : COMPRESSED NATURAL GAS

PRESSURE REQUIREMENT
- Vout =5.52 X P+ 7.24
- WHERE PRESSURE = [BAR abs]
- WHERE Vout = [% Vsupply]

GENERAL MASS
- MASS----------: 35 GRAM

THERMISTOR RESISTANCE TABLE			
T [°C]	R_nom [Ω]	R_min [Ω]	R_max [Ω]
-40	316181	301183	331179
-30	169149	162304	175994
-20	94143	90938	97349
-10	54308	52781	55836
0	32014	31290	32738
10	19691	19346	20036
20	12474	12315	12633
25	10000	9900	10100
30	8080	7977	8182
40	5372	5282	5462
50	3661	3585	3737
60	2536	2474	2598
70	1794	1744	1844
80	1290	1250	1330
90	941.8	909.6	974.0
100	697.2	671.3	723.1
110	524.9	504.0	545.9
120	399.6	382.6	416.6
130	308.4	294.6	322.3
135	271.3	258.6	283.9

TEMPERATURE OUTPUT FUNCTION

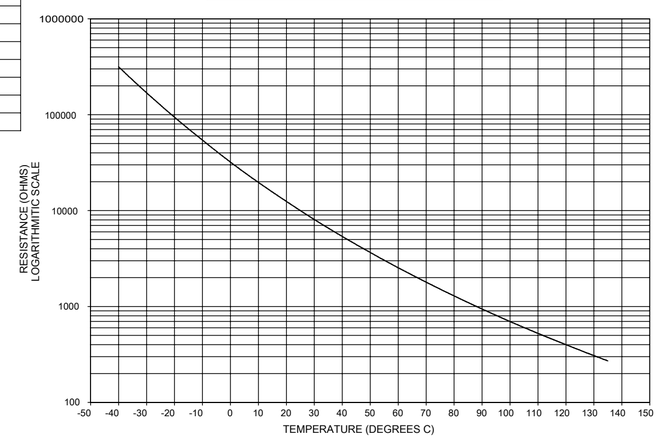

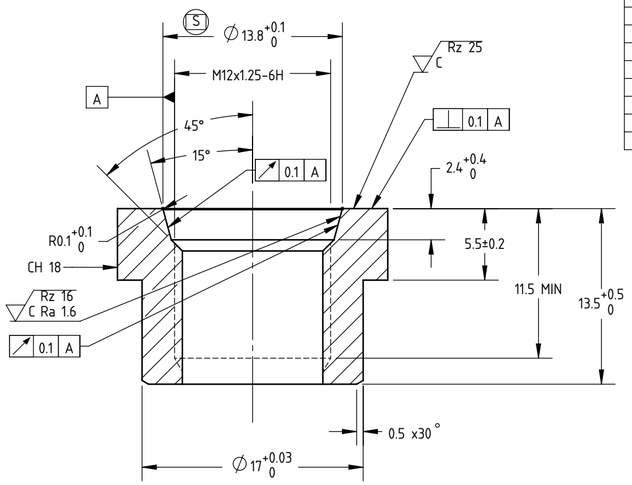

COUNTER PART INFORMATION
(FOR REFERENCE ONLY)

SECTION C-C
SCALE 3 : 1

NA	INTERNAL SEAL	FKM: HUTCHINSON P/N: 7DF1719 ACC. ISO 3601-3, CLASS S, EXCEPT FOR L: 0.4MM
7	THERMISTOR	NTC THERMISTOR
6	TERMINALS	SILVER PLATING SURFACE: 1.5 -5µm Ag OVER 1-3µm Ni
5	PROBE CAP	NORYL GTX 830 - BLACK
4	ENV. SEALANT	RTV SILICONE
3	EXTERNAL SEAL	FLUOROSILICONE (DIMENSIONS: 9.3 X 2.2) COMPOUND L1120-70 ACC. ISO 6149 AND SAE J2244
2	CONNECTOR	NORYL GTX 830 - BROWN
1	PRESSURE PORT	PLATED STEEL - C12L14
POS	DESCRIPTION	MATERIAL

FIT & FUNCTION CHARACTERISTICS IODVP20505MM Norm

2.64±0.1		D4
R0.79±0.1		D4
3X(24)		D2
64.0±1.0		D3
9.30±0.10		D3
19.40±0.40		D3
ø9.85 +0.15/0	◇	D3/4
M12x1.25-6g		C4
CHARACTERISTIC	CLASSIFICATION	COORDINATES

FOR REFERENCE ONLY, CHECK LATEST REVISION BEFORE USE.

FIRST ISSUE DATE 19-AUG-2014
DRAWN J. Brender á Brandis
ENGINEER G. Sirakov
ENGINEERING SUPERVISOR S. Groenhuijzen
PRODUCT GROUP APT
MATERIAL N.A.

NEITHER THIS PRINT NOR THE INFORMATION CONTAINED HEREON IS TO BE USED AGAINST THE INTERESTS OF SENSATA TECHNOLOGIES OR AGAINST THE INTERESTS OF ANY OF ITS AFFILIATED COMPANIES OR WHOLLY OWNED SUBSIDIARIES

INTERPRET DIMENSIONING AND TOLERANCING PER ASME Y14.5-2009. UNLESS OTHERWISE SPECIFIED DIMENSIONS ARE IN MILLIMETERS.

TOLERANCES:
LINEAR: 0 UP TO 6: ±0.1; OVER 6 UP TO 30: ±0.2; OVER 30 UP TO 120: ±0.3; OVER 120 UP TO -: ±0.5
ANGLES: ±3°

GEN. ROUGHNESS Ra acc. ISO 4287/4288
APPROX. WEIGHT g.
DO NOT SCALE DRAWING
THIRD ANGLE PROJECTION
DRAWING SIZE A2

Sensata Technologies
KOLTHOFSINGEL 8
POSTBOX 43
7600 AA ALMELO
THE NETHERLANDS

TITLE
ENVELOPE DRAWING
81CP66-01

DRAWING NUMBER T-678587-ENV
REV C
SCALE 2:1 | SOLIDWORKS | SHEET 1 OF 1