REVISION TABLE				
REV.	DESCRIPTION	ECO No	DATE	REQUESTOR
A	INITIAL RELEASE FOR PRODUCTION; AJD	ECO-104218	26-Sep-2014	R. Nap
B	CHANGED CNG HOMOLOGATION NUMBER AT F2;VA	ECO-119684	09-Sep-2015	D. Todorov

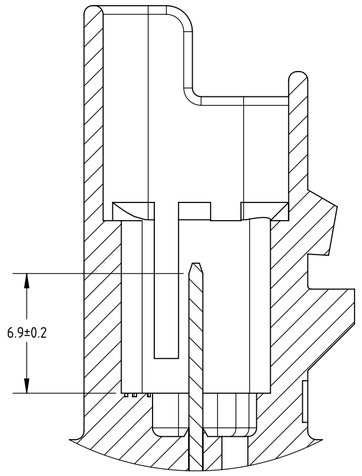

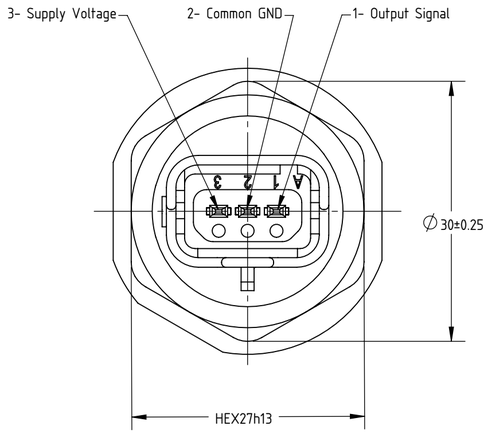

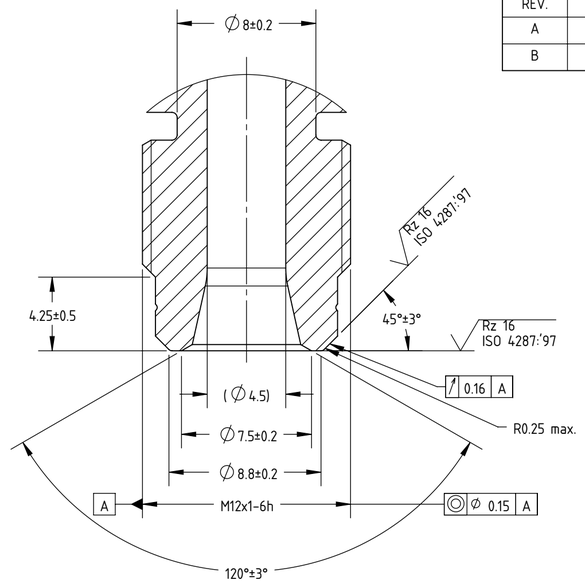

SECTION DETAIL A

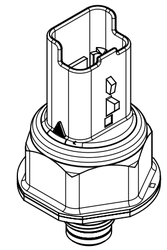

NOTE 1: MARKED SURFACE AND EDGE ARE SEALING AREAS WITH FOLLOWING SURFACE IMPERFECTION REQUIREMENT ACCORDING TO ISO 8785.
SIMw = 100µm; SIMe = 250µm
SIMsh = SIMch = 75 µm
SIMsh = SIMcd = 40 µm

SUPPLY VOLTAGE	: 4.75 TO 5.25 VDC (5VDC NOMINAL)
SUPPLY CURRENT	: 10 mA
OPERATING TEMPERATURE RANGE	: -40 TO 135 °C
OPERATING PRESSURE RANGE	: 0 TO 260 BAR (GAGE)
LOAD RESISTOR	: 5k6 Ohm to supply
PROOF PRESSURE	: 520 BAR
BURST PRESSURE	: 600 BAR
NOMINAL 0 BAR OUTPUT	: 10% Vpwr
NOMINAL SENSITIVITY	: 15.38 mV/BAR
HIGH DIAGNOSTIC BAND	: > 96%
LOW DIAGNOSTIC BAND	: < 4%
HIGH CLAMP RAIL	: 92% ± 2% Vpwr
SENSOR WEIGHT	: 39g (APPROX)

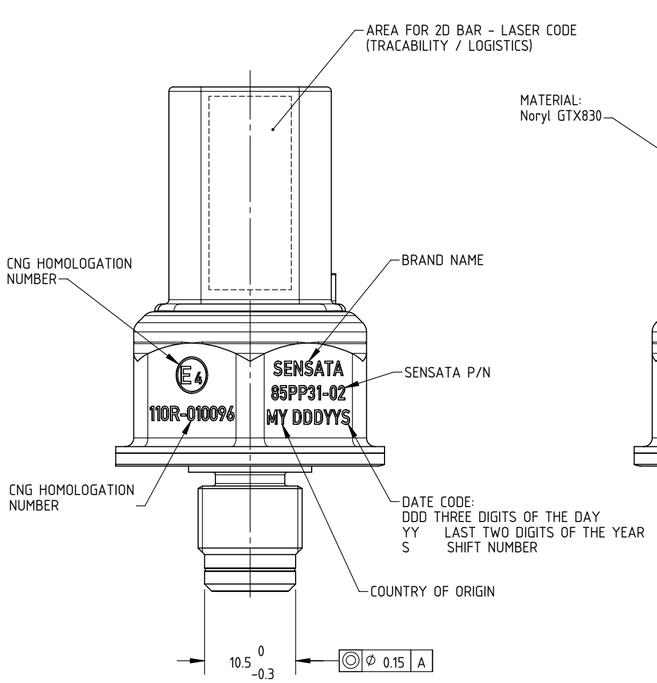

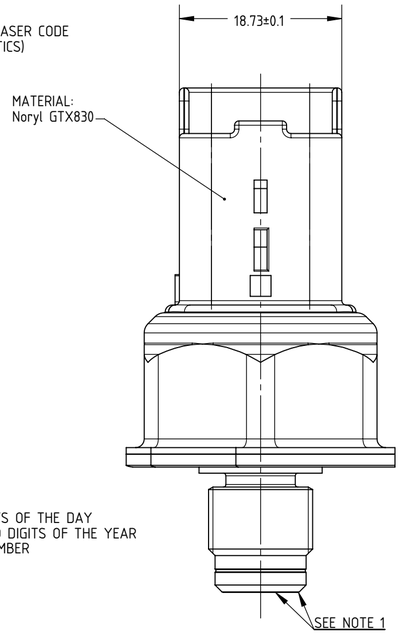

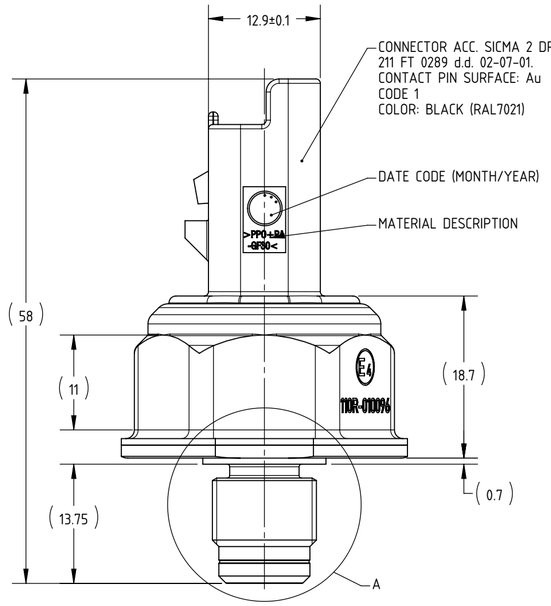

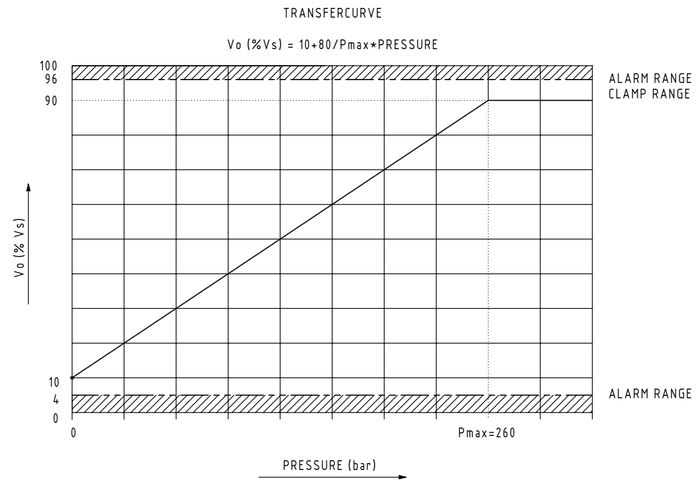

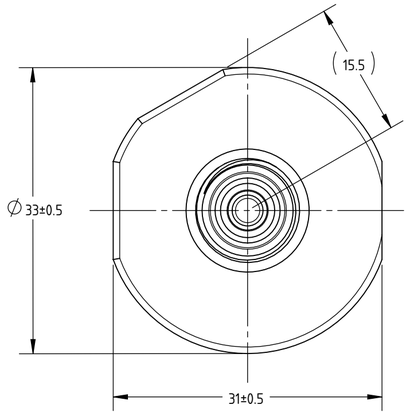

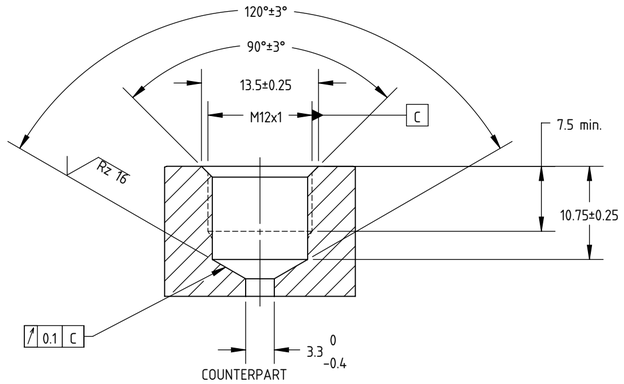

FOR REFERENCE ONLY, CHECK LATEST REVISION BEFORE USE.

FIRST ISSUE DATE	26-Sep-2014
DRAWN	A.J. Drent
ENGINEER	R. Nap
ENGINEERING SUPERVISOR	E. Drost
PRODUCT GROUP	MSG
MATERIAL	NA
GEN. ROUGHNESS	Ra acc. ISO 1302:2002
APPROX. WEIGHT	29.6 g.

NEITHER THIS PRINT NOR THE INFORMATION CONTAINED HEREON IS TO BE USED AGAINST THE INTERESTS OF SENSATA TECHNOLOGIES OR AGAINST THE INTERESTS OF ANY OF ITS AFFILIATED COMPANIES OR WHOLLY OWNED SUBSIDIARIES

INTERPRET DIMENSIONING AND TOLERANCING PER ASME Y14.5-2009. UNLESS OTHERWISE SPECIFIED DIMENSIONS ARE IN MILLIMETERS.

TOLERANCES:

LINEAR		ANGLES
0 UP TO 6:	±0.1	±3°
OVER 6 UP TO 30:	±0.2	
OVER 30 UP TO 120:	±0.3	
OVER 120 UP TO -:	±0.5	

DO NOT SCALE DRAWING | THIRD ANGLE PROJECTION | DRAWING SIZE A2

Sensata Technologies
KOLTHOFSINGEL 8
POSTBOX 43
7600 AA ALMELO
THE NETHERLANDS

TITLE

ENVELOPE DRAWING 85PP31-02

CNG TANK PRESSURE SENSOR

DRAWING NUMBER: T-674033-ENV | REV: B

SCALE 2:1 | SOLIDWORKS | SHEET 1 OF 1