RIKEN KEIKI

Includes 25 Programmed Target Gases

Portable combustible gas detector

Model GP-1000

Target gas Select function

(Manufactured in Japan)

Methane, Iso-Butane, Hydrogen, Toluene, Xylene, Alcohol etc.
25 different target gases can be selected for direct readout

Target gas is selectable

Direct reading is selectable
from a list of 25 gases.
Calibration to only 1 gas (CH4) is needed.

Pump booster function

Pump speed selectable from
0.3ml/min to 0.6ml/min.
Gas can be sampled faster or from
longer distance with higher pump rate.

Intrinsically safe

Safety rating ExiaⅡCT4 allows
users to detect a gas at Zone 0 hazardous area
where explosion hazards always exists.

Ingress protection rating IP67

Water proof, Dust proof construction for
outdoor use meets IP67 rating.

Filters (optional) can be used with standard gas sampling probe

H2S removal filter, silicone removal filter can be installed in standard gas sampling probe. Hydrogen sulfide or silicone that would damage sensor in GP-1000 can be removed by these filters.

MS JAB CM007

KHK MANAGEMENT SYSTEM

ISO 9001 95QR・007
ISO 14001 97ER・005

TOKYO PLANT・OKEGAWA MANUFACTURING DIVISION・HAKODATE FACTORY

RIKEN KEIKI Co.,Ltd.

Specification

Model	GP-1000
Gas detected	Combustible gas (CH4, HC etc. Refer to the gas list)
Sensor principle	Catalytic combustion
Detection range	0 ~ 100%LEL
Alarm types	Gas alarm: Latching, 1st and 2nd alarm Trouble alarm: Low flow, sensor disconnection, low battery voltage, Circuit abnormality, detection range abnormality
Alarm methods	Gas alarm: Intermittent buzzer, flashing lights, gas concentration reading blinks Trouble alarm: Continuous buzzer, flashing lights, trouble condition is displayed
Preset alarms	1st: 10%LEL, 2nd: 50%LEL
Indication accuracy	Full scale +/- 5% (at same condition)
Response time	Within 30 seconds (T90)
Sampling method	Sample-draw, Flow rate > 0.3L/min (Approx. 0.6L/min for pump boosting mode)
Indication precision	Digital LCD with 7 segments + Bar meter (50 segment) + Status information Digital numeral 7 segments indication: 0 - 100%LEL Digital bar meter indication: Auto range (0 ~ 10%LEL / 0 ~ 100%LEL) 0~10 %LEL (L range) 0~100 %LEL (H range)
Power source	AA alkaline battery, 4pcs
Continuous operation	More than 20 hours (new battery, no alarm and no indication, at 25°C)
Operating temp. & humidity	Operating temperature -20 ~ 50°C [-4 ~ 122°F] Operating humidity 0 ~ 95%RH (Non-condensing) Storage temperature -25 ~ 60°C [-13 ~ 140°F] Storage humidity 0 ~ 95%RH (Non-condensing)
Dimension	80.1 (W) × 124 (H) × 36 (D) mm (3.15 (W) × 4.88 (H) × 1.42 (D) inches)
Weight	Approx. 260g (9.2 oz.) (exclude alkaline battery)
Water dust proof	IP 67
Safety design	Intrinsically safety ExiaIICT4
Approvals	Ex-proof: IECEx, ATEX Other: CE marking
Function	LCD backlight, data log, log data indication, peak indication, pump boosting, gas select

Target gases

Sensitivity curve for 25 gases is originally loaded in GP-1000.
Target gas can be switched by button operation.

No.	Gas list	Name indicated on LCD	Lower explosion limit LEL
1	Methane	CH4	5.0vol%
2	Isobutane	i-C4H10	1.8vol%
3	Hydrogen	H2	4.0vol%
4	Methanol	CH3OH	5.5vol%
5	Acetylene	C2H2	1.5vol%
6	Etylene	C2H4	2.7vol%
7	Ethane	C2H6	3.0vol%
8	Ethanol	C2H5OH	3.3vol%
9	Propylene	C3H6	2.0vol%
10	Acetone	C3H6O	2.15vol%
11	Propane	C3H8	2.0vol%
12	Butadiene	C4H6	1.1vol%
13	Cyclopentane	C5H10	1.4vol%
14	Benzene	C6H6	1.2vol%
15	n-Hexane	n-C6H14	1.2vol%
16	Toluene	C7H8	1.2vol%
17	Heptane	n-C7H16	1.1vol%
18	Xylene	C8H10	1.0vol%
19	Ethyl acetate	EtAc	2.1vol%
20	IPA	IPA	2.0vol%
21	MEK	MEK	1.8vol%
22	Methyl methacrylate	MMA	1.7vol%
23	Dimethylether	DME	3.0vol%
24	Methyl isobutyl ketone	MIBK	1.2vol%
25	Tetrahydrofuran	THF	2.0vol%

Note 1) Alarm accuracy, response time etc. are confirmed with calibration gas.
Note 2) Contact Riken Keiki if GP-1000 is required to be calibrated with other than CH4, i-C4H10, H2.
Note 3) Gas selection is not available when GP-1000 is calibrated with other than CH4, i-C4H10.
Note 4) The measuring results of the gas selection are intended for guidance only. For the most accurate measurements, GP-1000 should be calibrated using the target gas.

Standard accessory

Hand strap

Sampling probe
(with water trap function)

Optional accessory

Carrying case

Protection film

Cartridge filter
• Silicone removal
• H2S removal

Data logger
management program

Outer dimension

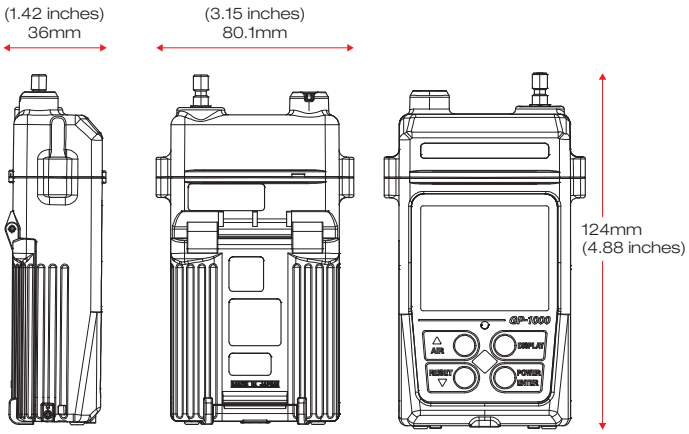

RIKEN KEIKI Co., Ltd.

2-7-6 Azusawa, Itabashi-ku, Tokyo 174-8744, Japan
Phone : +81-3-3966-1113
Telefax : +81-3-3558-9110
E-mail : intdept@rikenkeiki.co.jp
Web site : http://www.rikenkeiki.co.jp

★ **Distributed by:**

GVZ components
Your Sensing Solutions

Via Magenta 77/16A - 20017 Rho (MI) Italy
T: +39 02 3340 0846 - www.gvzcomp.it

Printed in Japan C0E-1100-141010Ⓢ